Applies To: **2008–09 Accord L4** – ALL

December 1, 2009

Blower Motor Is Noisy During Cold Weather

SYMPTOM

The blower motor is noisy during cold weather. In very rare cases, the blower motor may not operate.

PROBABLE CAUSE

The vehicle is not equipped with a passenger's dashboard undercover to suppress the sound of the blower motor. Without an undercover, the front passenger could inadvertently kick the blower motor area. In very rare cases, this might loosen the blower motor power transistor connector.

CORRECTIVE ACTION

Check the blower motor resistor connector for damage, replace any damaged parts, then install a passenger's dashboard undercover.

PARTS INFORMATION

Passenger's Dashboard Undercover:
P/N 77346-TA6-A01, H/C 8774382

Power Transistor:
P/N 79330-SNA-A01, H/C 8139321
(Use only if needed.)

A/C Wire Harness:
P/N 80650-TA0-A00, H/C 8655029
(EX and LX with M/T; use only if needed.)

A/C Wire Harness:
P/N 80650-TA0-A10, H/C 8670762
(EX and LX with A/T; use only if needed.)

A/C Wire Harness:
P/N 80650-TA0-A20, H/C 8655037
(EX-L without navi; use only if needed.)

A/C Wire Harness:
P/N 80650-TA0-A30, H/C 8655045
(EX-L with navi; use only if needed.)

WARRANTY CLAIM INFORMATION

In warranty: The normal warranty applies.

OP#	Description	FRT
8411C7	Install a passenger's dashboard undercover.	0.1
A	Add for replacing the blower motor power transistor.	0.2
B	Add for replacing the A/C wire harness.	4.4

Failed Part: P/N 77346-TA6-A01
H/C 8774382

Defect Code: 07801

Symptom Code: 03212

Skill Level: Repair Technician

Out of warranty: Any repair performed after warranty expiration may be eligible for goodwill consideration by the District Parts and Service Manager or your Zone Office. You must request consideration, and get a decision, before starting work.

© 2009 American Honda Motor Co., Inc. – All Rights Reserved

Skill Level
R
REPAIR

CUSTOMER INFORMATION: The information in this bulletin is intended for use only by skilled technicians who have the proper tools, equipment, and training to correctly and safely maintain your vehicle. These procedures should not be attempted by "do-it-yourselfers," and you should not assume this bulletin applies to your vehicle, or that your vehicle has the condition described. To determine whether this information applies, contact an authorized Honda automobile dealer.

REPAIR PROCEDURE

1. Remove the secondary terminal lock from the 4P connector on the blower motor power transistor, then remove the 4P connector. Closely inspect both sides of the 4P connector and its terminals:
   - If the connectors and the terminals on both sides of the 4P connector are OK, go to step 3.
   - If the power transistor side of the 4P connector is damaged, or if any of the terminals in the power transistor are bent or loose, replace the power transistor, then go to step 4.
   - If the wire harness side of the 4P connector is damaged, or of any of the terminals in that connector are bent or loose, go to step 2.

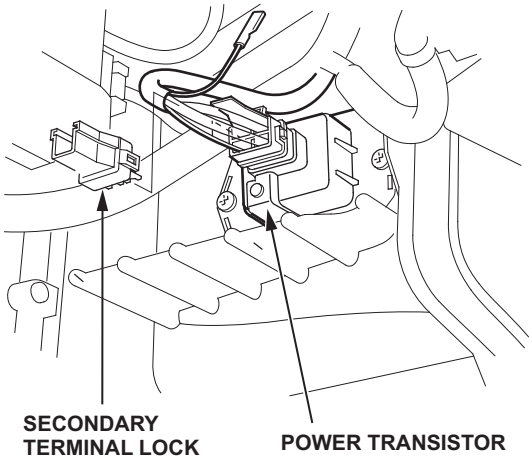

2. Replace the A/C wire harness, then go to step 4:
   - *Vehicles with climate control and navi:* Refer to page 22-71 of the *2008–2010 Accord Service Manual*, or
   - *Vehicles with climate control without navi:* Refer to page 22-72 of the *2008–2010 Accord Service Manual*, or
   - *Vehicles with HVAC control system:* Refer to page 22-73 of the *2008–2010 Accord Service Manual*, or
   - Online, enter keywords **A/C WIRE**, and select the correct **A/C Wire Harness** diagram from the list.
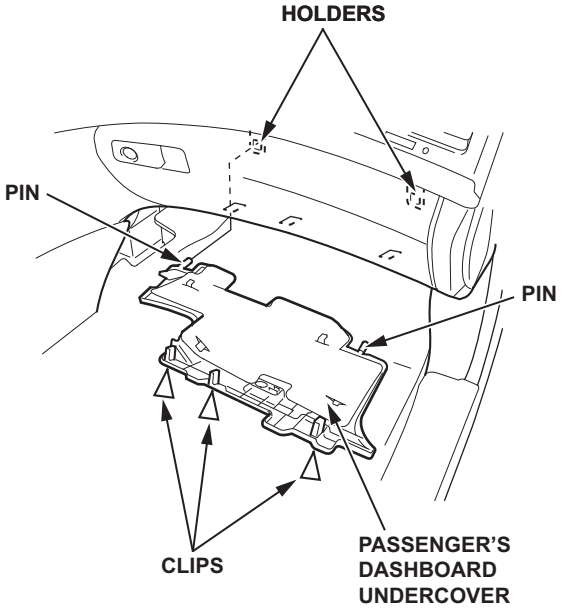
3. Securely reconnect the power transistor 4P connector and its secondary terminal lock.
4. Install a passenger's dashboard undercover:
   - Align the pins on the cover with the holders on the lower edge of the dashboard.
   - Push up the front edge of the cover to attach its clips to the dashboard.